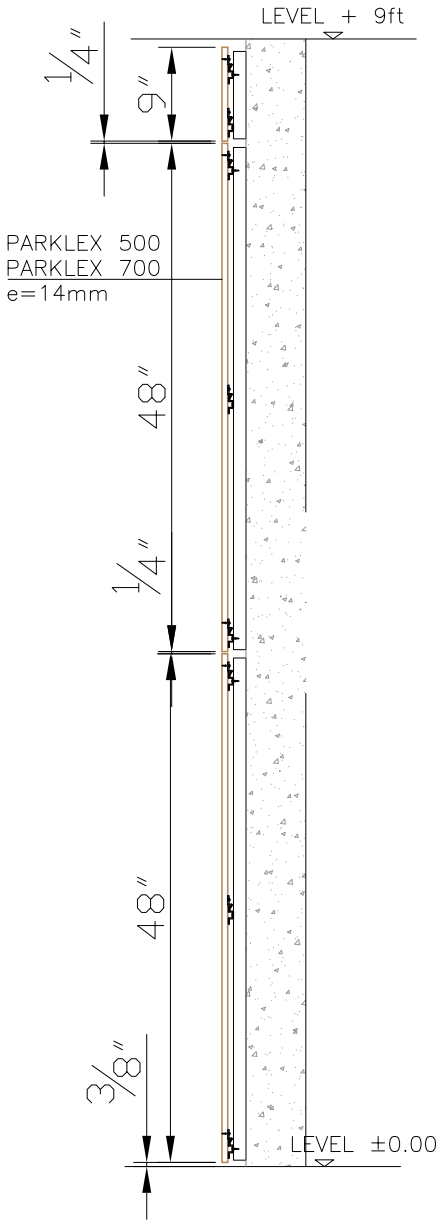

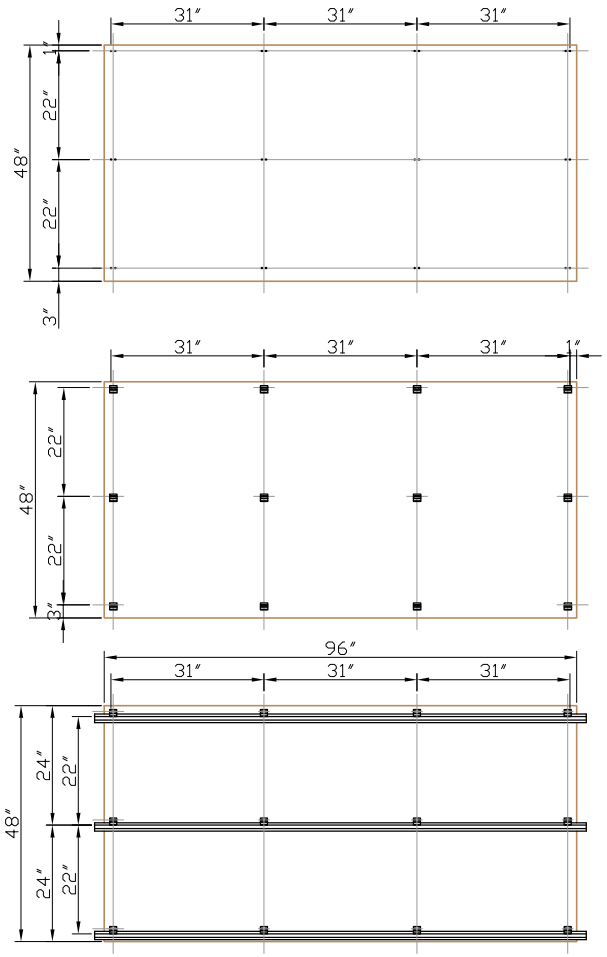

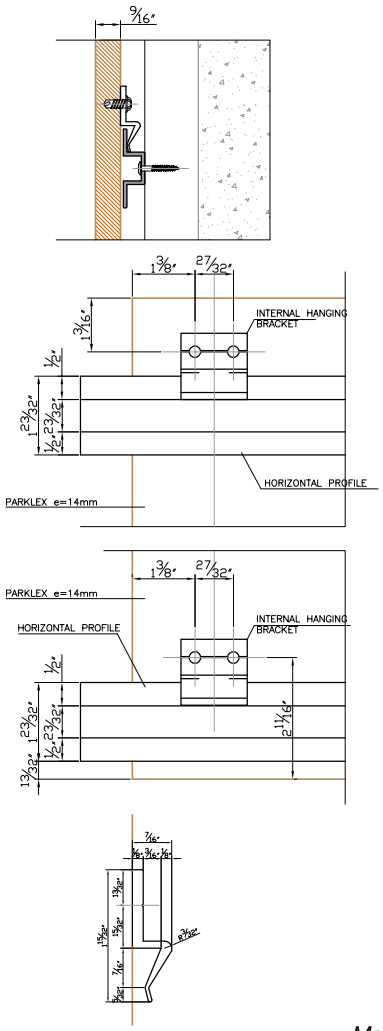

Measures in inches

Parklex®

Producto / *Product:*	Nº Plano / *Plan #:*	Escala / *Scale:*	Fecha / *Date:*
Parklex® 500 Parklex® 700	**INT-500-700-RSC-04-US**		**2009.05.11**

Plano / *Plan:*

Hanger system element spacing for Interior Parklex t=14mm (I)